Measuring Form

DRAPERY PLUS

A Corporate Stitches, LLC Company

Creating Unique Designs That Match Your Personality

(678) 367-4434

corporatestitche@yahoo.com

	Date:
Customer:	**Room:**
Type of Treatment:	**# of Windows:**

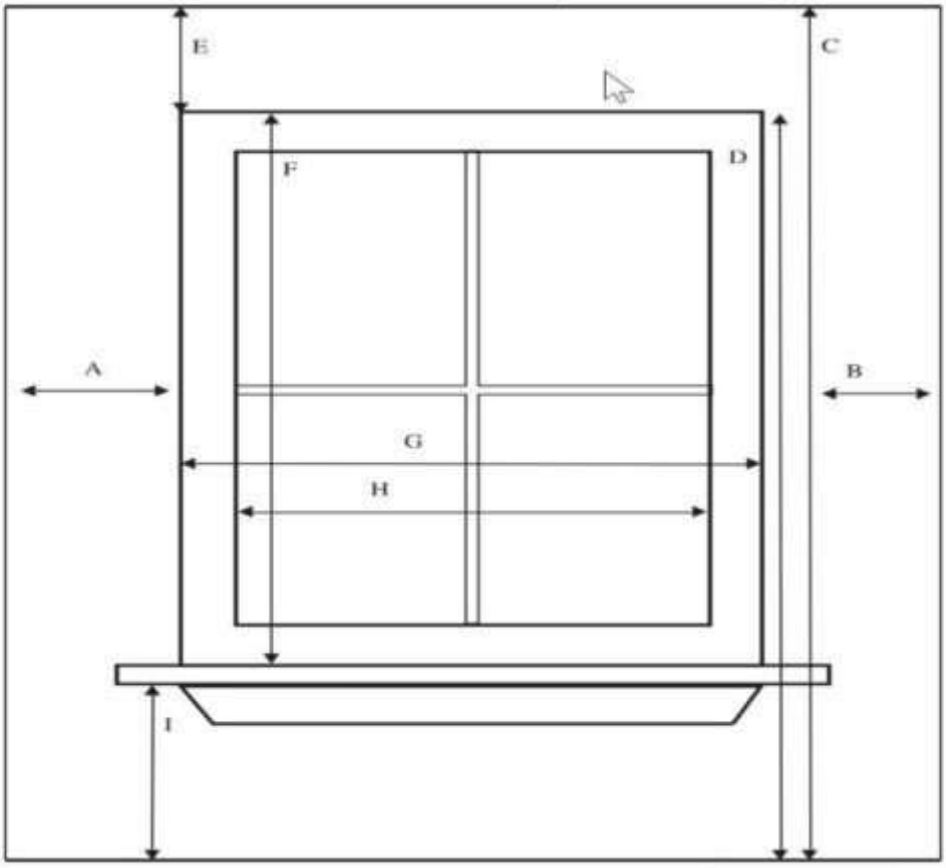

A. Left side from outside molding to wall or obstacle	
B. Right side from outside molding to wall or obstacle	
C. Ceiling or Crown molding to floor	
D. Top of window molding to floor	
E. Top of window molding to ceiling or crown molding	
F. Window molding to Window sill	
G. Outside of left molding to outside of right molding	
H. Inside of left molding to Inside of right molding	
I. Sill to floor	

Notes:
Delivery Date: